Electrolux PROFESSIONAL

Modular Cooking Range Line 900XP Gas Solid Top on Gas Oven

ITEM #

MODEL #

NAME #

SIS #

AIA #

391264 (E9STGH10GA) Gas Solid Top on gas Oven (AGA) - Aus

Short Form Specification

Item No.

High efficiency 10.5 kW central burner with flame failure device and protected pilot light. Large cooking surface with differentiated heating zones. Large flat cooking surface made in cast iron allows for the use of a number of various sized pots and pans, all easily moved across the surface without lifting. Oven chamber with 3 levels of runners to accomodate 2/1 GN shelves (2 steam pans). Ribbed, cast-iron oven base plate. Exterior panels in stainless steel. Worktop in 20/10, stainless steel. Right angled side edges eliminate gaps and possible dirt traps between units.

APPROVAL:

Main Features

- All major compartments located in front of unit for ease of maintenance.
- Durable cast iron cooking plate, easy to clean.
- Base compartment consists of a gas heated standard oven with stainless steel burners and self stabilizing flame positioned beneath the base plate. Oven chamber to have 3 levels of runners to accomodate 2/1 GN shelves (2 steam pans) and ribbed cast iron base plate.
- Central burner with optimized combustion, flame failure device and protected pilot light.
- Pans can easily be moved from one area to another without lifting.
- Temperature gradients to satisfy different cooking needs, provided over the whole plate thanks to the temperature fine-tuning by zone.
- The center of the plate can reach a maximum temperature of 500 °C while decreasing outwards.
- The special design of the control knob system guarantees against water infiltration.
- Various sizes of pans can be used at the same time due to large surface area with no intermediate sectors.
- Gas heated, 10.5 kW central burner, solid top.
- Piezo ignition.
- Oven thermostat adjustable from 120 °C to 280 °C.

Construction

- Model has right-angled side edges to allow flush fitting joints between units, eliminating gaps and possible dirt traps.
- All exterior panels in Stainless Steel with Scotch Brite finishing.
- Unit is 930 mm deep to give a larger working surface area.
- IPX5 water resistance certification.

Optional Accessories

- Junction sealing kit PNC 206086 ❑
- Draught diverter, 150 mm diameter PNC 206132 ❑
- Matching ring for flue condenser, 150 mm diameter PNC 206133 ❑
- Kit 4 wheels - 2 swivelling with brake - it is mandatory to install Base support and wheels PNC 206135 ❑
- Flanged feet kit PNC 206136 ❑
- Frontal kicking strip for concrete installation, 800mm PNC 206148 ❑
- Frontal kicking strip for concrete installation, 1000mm PNC 206150 ❑

• Frontal kicking strip for concrete installation, 1200mm	PNC 206151	❑
• Frontal kicking strip for concrete installation, 1600mm	PNC 206152	❑
• Pair of side kicking strips for concrete installation	PNC 206157	❑
• Frontal kicking strip, 800mm (not for refr-freezer base)	PNC 206176	❑
• Frontal kicking strip, 1000mm (not for refr-freezer base)	PNC 206177	❑
• Frontal kicking strip, 1200mm (not for refr-freezer base)	PNC 206178	❑
• Frontal kicking strip, 1600mm (not for refr-freezer base)	PNC 206179	❑
• Pair of side kicking strips (not for refr-freezer base)	PNC 206180	❑
• 2 panels for service duct for single installation	PNC 206181	❑
• 2 panels for service duct for back to back installation	PNC 206202	❑
• Kit 4 feet for concrete installation (not for 900 line free standing grill)	PNC 206210	❑
• Flue condenser for 1 module, 150 mm diameter	PNC 206246	❑
• Water column with swivel arm (water column extension not included)	PNC 206289	❑
• Water column extension for 900 line	PNC 206290	❑
• Chimney upstand, 800mm	PNC 206304	❑
• Base support for feet or wheels - 800mm (700/900)	PNC 206367	❑
• Chimney grid net, 400mm (700XP/900)	PNC 206400	❑
• Scraper for free standing grills	PNC 206422	❑
• Side handrail-right/left hand (900XP)	PNC 216044	❑
• Frontal handrail, 800mm	PNC 216047	❑
• Frontal handrail, 1200mm	PNC 216049	❑
• Frontal handrail, 1600mm	PNC 216050	❑
• 2 side covering panels for free standing appliances	PNC 216134	❑
• Large handrail - portioning shelf, 400mm	PNC 216185	❑
• Large handrail - portioning shelf, 800mm	PNC 216186	❑
• Pressure regulator for gas units	PNC 927225	❑

The company reserves the right to make modifications to the products without prior notice. All information correct at time of printing.

Modular Cooking Range Line
900XP Gas Solid Top on Gas Oven

Front

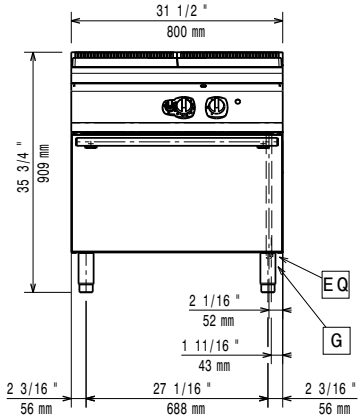

Side

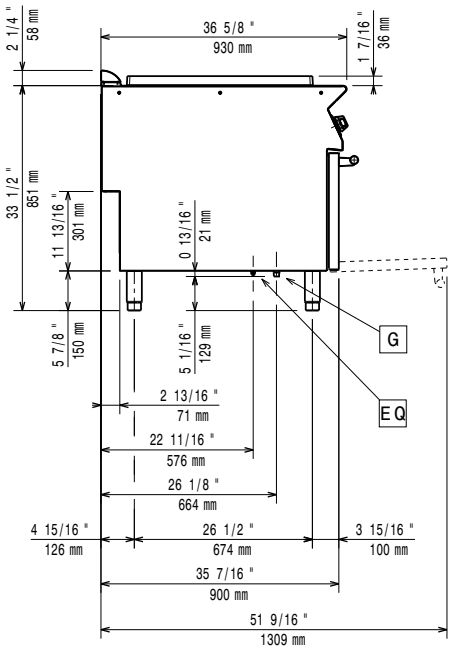

EQ = Equipotential screw
G = Gas connection

Top

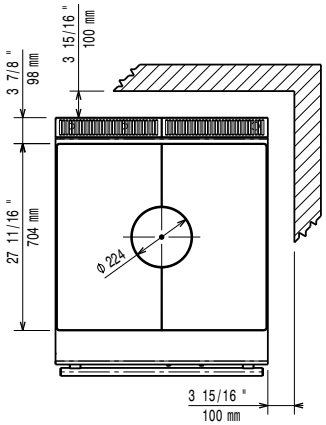

Gas

Gas Power:	
391264 (E9STGH10GA)	19 kW
Standard gas delivery:	Natural Gas G20 (20mbar)
Gas Type Option:	LPG;Natural Gas
Gas Inlet:	1/2"

Key Information:

Solid top usable surface (width):	795 mm
Solid top usable surface (depth):	696 mm
Oven working Temperature:	120 °C MIN; 280 °C MAX
Oven Cavity Dimensions (width):	575 mm
Oven Cavity Dimensions (height):	300 mm
Oven Cavity Dimensions (depth):	700 mm
External dimensions, Width:	800 mm
External dimensions, Depth:	930 mm
External dimensions, Height:	850 mm
Net weight:	171 kg
Shipping weight:	170 kg
Shipping height:	1090 mm
Shipping width:	1020 mm
Shipping depth:	880 mm
Shipping volume:	0.98 m³
Certification group:	N9TG

If appliance is set up or next to or against temperature sensitive furniture or similar, a safety gap of approximately 150 mm should be maintained or some form of heat insulation fitted.

The company reserves the right to make modifications to the products without prior notice. All information correct at time of printing.

2024.10.07